Clarke®

WOODWORKER



BISCUIT JOINTER

MODEL NO: CBJ1010

PART NO: 6462171

OPERATING & MAINTENANCE INSTRUCTIONS

ORIGINAL INSTRUCTIONS

DL0726

INTRODUCTION

Thank you for purchasing this CLARKE Bench Biscuit Jointer. Before attempting to use this product, please read this manual thoroughly and follow the instructions carefully. In doing so you will ensure the safety of yourself and that of others around you, and you can look forward to your purchase giving you long and satisfactory service.

GUARANTEE

This product is guaranteed against faulty manufacture for a period of 12 months from the date of purchase. Please keep your receipt which will be required as proof of purchase.

This guarantee is invalid if the product is found to have been abused or tampered with in any way, or not used for the purpose for which it was intended.

Faulty goods should be returned to their place of purchase, no product can be returned to us without prior permission.

This guarantee does not affect your statutory rights.

ENVIRONMENTAL RECYCLING POLICY

Through purchase of this product, the customer is taking on the obligation to deal with the WEEE in accordance with the WEEE regulations in relation to the treatment, recycling & recovery and environmentally sound disposal of the WEEE.



In effect, this means that this product must not be disposed of with general household waste. It must be disposed of according to the laws governing Waste Electrical and Electronic Equipment (WEEE) at a recognised disposal facility.

TECHNICAL SPECIFICATIONS

Model Number	CBJ1010
Tool Dimensions (L x W x H)	420 x 250 x 160 mm
Weight	3.35 kg
Power Supply	230V @ 50Hz, 1ph
Rated Wattage	1010 Watts
Rated Ampage	4.39 A
Electrical Insulation Class	Class II
Duty Cycle	S2
Spindle No Load Speed	11000 rpm
Groove Cut Width/Depth	4mm/20mm
Power Cable Length	1.9m
Plug Fuse	13 A
IP Rating	IP20
Operation Temperature	0°C ~ 35°C (32°F ~ 95°F)
Dust Extraction Outlet	Inner Diameter: Ø31.5mm Outer Diameter: Ø42.2mm
Handle Vibration	3.594 m/s^2 (1.5 Uncertainty Factor)
Sound Pressure Level (LpA)	93 dB
Sound Power Level (LwA)	104 dB
Guaranteed Sound Power Level (LwA)	107 dB
Uncertainty Factor	3 dB
Cutting Disc (Dia. x Bore, Thickness)	Ø100 x Ø22 x 4mm, 6 Teeth, Max Rev.: 13000rpm

Please note that the details and specifications contained herein are correct at the time of going to print. However CLARKE International reserve the right to change specifications at any time without prior notice.

SAFETY WARNINGS



WARNING: READ ALL SAFETY WARNINGS AND ALL INSTRUCTIONS. FAILURE TO FOLLOW THE WARNINGS AND INSTRUCTIONS CAN RESULT IN ELECTRIC SHOCK, FIRE AND/OR INJURY.

Save all warnings and instructions for future reference.

The term “power tool” in the warnings refers to your mains-operated biscuit jointer.

WORK AREA SAFETY

1. **Keep the work area clean and well lit.** Cluttered or dark areas invite accidents.
2. **DO NOT operate power tools in explosive atmospheres, such as in the presence of flammable liquids, gases or dust.** Power tools create sparks which can ignite the dust or fumes.
3. **Keep children and bystanders away while operating a power tool.** Distractions can cause you to lose control.

ELECTRICAL SAFETY

1. **Power tool plugs must match the outlet. DO NOT modify the plug in any way. DO NOT use any adapter plugs with earthed (grounded) power tools.** Unmodified plugs and matching outlets will reduce risk of electric shock.
2. **Avoid body contact with earthed or grounded surfaces, such as pipes, radiators, ranges and refrigerators.** There is an increased risk of electric shock if your body is earthed or grounded.
3. **DO NOT expose power tools to rain or wet conditions.** Water entering a power tool will increase the risk of electric shock.
4. **DO NOT abuse the cable. DO NOT use the cable for carrying, pulling or unplugging the power tool.** Keep the cable away from heat, oil, sharp edges or moving parts. Damaged or entangled cables increase the risk of electric shock.
5. **When operating a power tool outdoors, use an extension cable suitable for outdoor use.** Use of a cable suitable for outdoor use reduces the risk of electric shock.
6. **If operating a power tool in a damp location is unavoidable,** use a residual current device (RCD) protected supply. Use of an RCD reduces the risk of electric shock.

PERSONAL SAFETY

1. **Stay alert, watch what you are doing and use common sense when operating a power tool. DO NOT** use a power tool while you are tired or under

the influence of drugs, alcohol or medication. A moment of inattention while operating power tools can result in personal injury.

2. **Use personal protective equipment. Always wear eye and ear protection.** Protective equipment such as dust mask, non-skid safety shoes or hearing protection used for appropriate conditions will reduce personal injuries. This machine develops considerable noise when in use.
3. **Prevent unintentional starting. Ensure the switch is in the off position before connecting to power supply**.
4. **Remove any adjusting key or wrench before turning the power tool on.** A wrench or a key left attached to a rotating part of the power tool can result in personal injury.
5. **DO NOT overreach. Keep proper footing and balance at all times.** This enables better control of the power tool in unexpected situations.
6. **Dress correctly. DO NOT wear loose clothing or jewellery. Keep your hair and clothing away from moving parts.** Loose clothes, jewellery or long hair can be caught in moving parts.
7. **If devices are provided for the connection of dust extraction and collection facilities, ensure these are connected and correctly used.** The use of dust collection can reduce dust-related hazards.

POWER TOOL USE AND CARE

1. **DO NOT force the power tool. Use the correct power tool for your application.** The correct power tool will do the job better and safer at the rate for which it was designed.
2. **DO NOT use the power tool if the switch does not turn it on and off.** Any power tool that cannot be controlled with the switch is dangerous and must be repaired.
3. **Disconnect the plug from the power source before making any adjustments, changing accessories, or storing power tools.** Such preventive safety measures reduce the risk of starting the power tool accidentally.
4. **Store idle power tools out of the reach of children and do not let persons unfamiliar with the power tool or these instructions to operate the power tool.** Power tools are dangerous in the hands of untrained users.
5. **Maintain power tools.** Check for misalignment or binding of moving parts, breakage of parts and any other condition that can affect the power tool's operation. If damaged, have the power tool repaired before use. Many accidents are caused by poorly maintained power tools.
6. **Keep cutting tools sharp and clean.** Sharp cutting edges are less likely to bind and are easier to control.
7. **Use the power tool, accessories and tool bits etc. in accordance with these instructions, taking into account the working conditions and the work to be**

performed. Use of the power tool for operations different from those intended could result in a hazardous situation.

ADDITIONAL PRECAUTIONS FOR BISCUIT JOINTERS

1. **DO NOT** lock the cover with the blade in the open position, always ensure it is operating properly, freely returning to fully cover the blade teeth.
2. **DO NOT** stop the blade by applying lateral pressure on the side of the blade.
3. **DO NOT** use blades that do not comply with the specifications in this manual.
4. **DO NOT** use high speed steel (HSS) blades. **DO NOT** use blades that are deformed or cracked etc.
5. **ALWAYS** check blade for damage before use.

SYMBOLS

	Fully read this manual and safety instructions before use		Eye protection should be worn
	Dust mask should be worn		Ear protection should be worn
	**WARNING:** Loud Noise		**WARNING: DO NOT** use blunt or damaged disc blade
	**WARNING:** Sharp edges on disc blade		**WARNING:** Check for proper function of guard retraction before use
	Adhere to the local WEEE regulations		Class II Double Insulation

ELECTRICAL CONNECTION

WARNING! READ THESE ELECTRICAL SAFETY INSTRUCTIONS THOROUGHLY BEFORE CONNECTING THE PRODUCT TO THE MAINS SUPPLY.

Before switching the product on, make sure that the voltage of your electricity supply is the same as that indicated on the rating plate. This product is designed to operate on 230VAC 50Hz. Connecting it to any other power source may cause damage.

This product may be fitted with a non-rewireable plug. If it is necessary to change the fuse in the plug, the fuse cover must be refitted. If the fuse cover becomes lost or damaged, the plug must not be used until a suitable replacement is obtained.

If the plug has to be changed because it is not suitable for your socket, or due to damage, it should be cut off and a replacement fitted, following the wiring instructions shown below. The old plug must be disposed of safely, as insertion into a mains socket could cause an electrical hazard.

WARNING! THE WIRES IN THE POWER CABLE OF THIS PRODUCT ARE COLOURED IN ACCORDANCE WITH THE FOLLOWING CODE: BLUE = NEUTRAL BROWN = LIVE

If the colours of the wires in the power cable of this product do not correspond with the markings on the terminals of your plug, proceed as follows.

- The **Blue** wire must be connected to the terminal marked **N** or coloured **Black.**
- The **Brown** wire must be connected to the terminal marked **L** or coloured **Red.**

Plug must be BS1363/A approved.

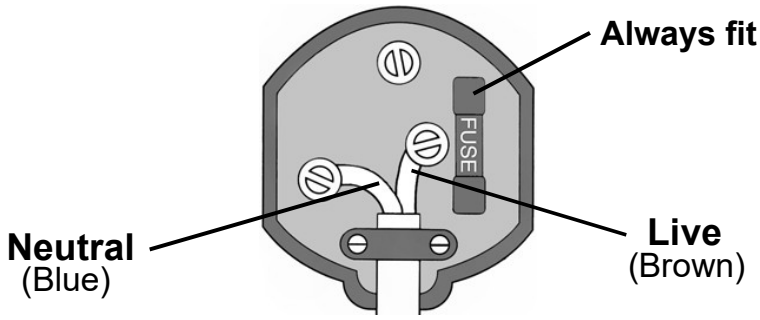

Ensure that the outer sheath of the cable is firmly held by the clamp

We strongly recommend that this machine is connected to the mains supply via a Residual Current Device (RCD). If in any doubt, consult a qualified electrician. DO NOT attempt any repairs yourself.

COMPONENTS

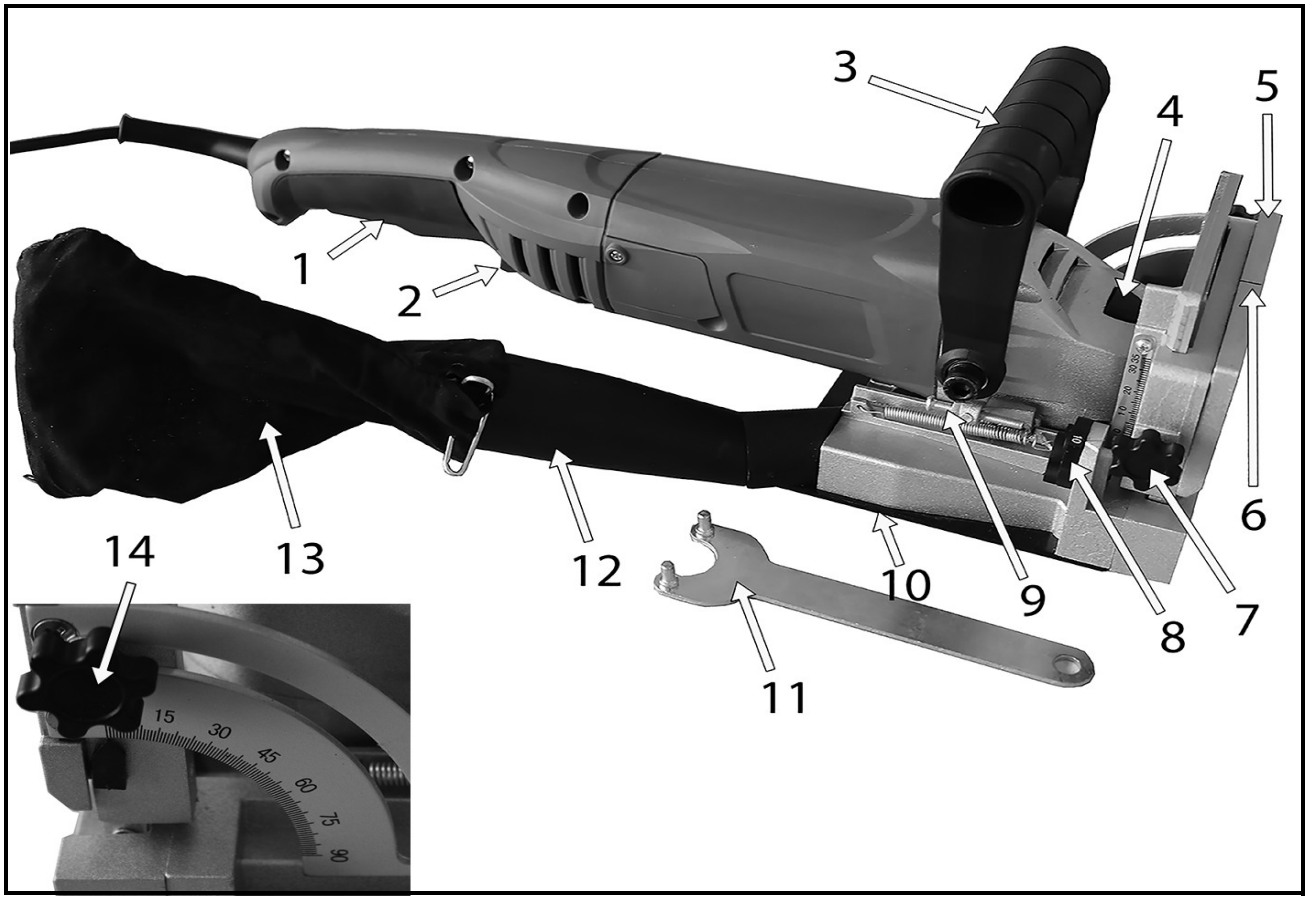

When unpacking, check contents and advise your dealer immediately if any parts are missing. The essential components are as follows.

NO	DESCRIPTION	NO	DESCRIPTION
1	ON/OFF Switch	8	Depth Adjustment Wheel
2	Lock Switch	9	Depth Adjustment Screw
3	Handle	10	Baseplate
4	Locking Knob for Changing Cutter	11	Face Spanner
5	Angle Stop	12	Adapter for Dust Extraction System/Dust Bag
6	Midline	13	Dust Bag
7	Height Adjustment Wheel	14	Angle Adjustment Wheel

ACCESSORIES

The biscuit jointer is supplied with the following accessories as standard:

1. Carbide-Tipped Blade
2. Face Spanner
3. Dust Bag & Dust Extractor Adapter

ASSEMBLY

WARNING: FOR YOUR OWN SAFETY, DO NOT CONNECT THE BISCUIT JOINTER MACHINE TO A POWER SOURCE UNTIL IT IS FULLY ASSEMBLED, AND YOU HAVE READ AND UNDERSTOOD ALL SAFETY AND OPERATIONAL INSTRUCTIONS.

1. Attach the dust extractor adapter to the base plate dust extraction port.
2. Attach the dust bag by pinching together the clip on the bag and sliding it over the adaptor or dust extraction system, i.e. vacuum cleaner, to the dust extractor adaptor.

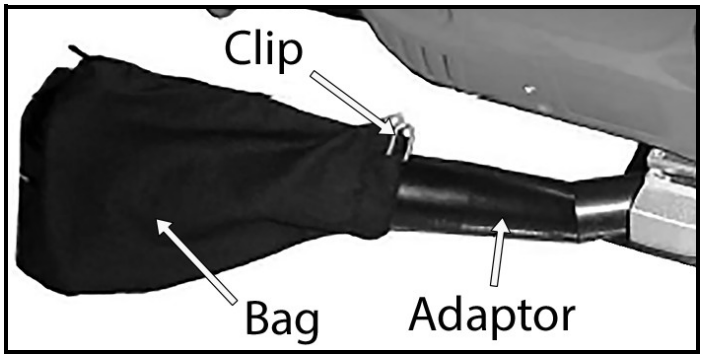

PREPARING FOR USE

WARNING: MAKE SURE THE MACHINE IS DISCONNECTED FROM THE MAINS SUPPLY BEFORE PERFORMING CHECKS, ADJUSTMENTS, OR SETUP PROCEDURES.

CHANGING OR INSTALLING CUTTER BLADE

CAUTION: THE CUTTER IS EXTREMELY SHARP, TAKE CARE WHEN HANDLING!

1. Loosen the baseplate screw and lift the baseplate off.
2. Press the locking knob in and keep it pressed in. At the same time insert the two pronged face spanner into flange ‘A’ and loosen the cutter disc by turning the flange anticlockwise.
3. Remove the cutter disc. In doing so, ensure that flange ‘B’ does not become misplaced.
4. Insert the new cutter disc and reassemble the jointer by reversing the above steps. When doing so, tighten flange ‘A’ firmly.
5. Refit baseplate and screws.

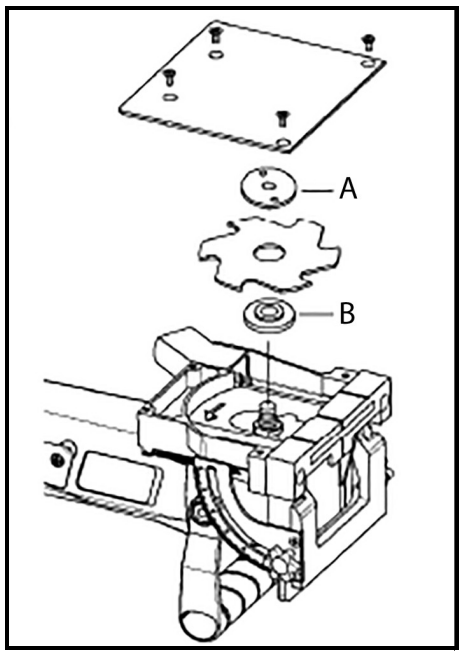

SETTING THE CUTTING DEPTH

1. Set the required cutting depth by using the Depth Adjustment Wheel.
2. The designations on the wheel reflect the various sizes of biscuit dowels, see page 12.
3. Push the drive motor forwards to check the cutting depth. The plug should be disconnected from the mains supply for this purpose.

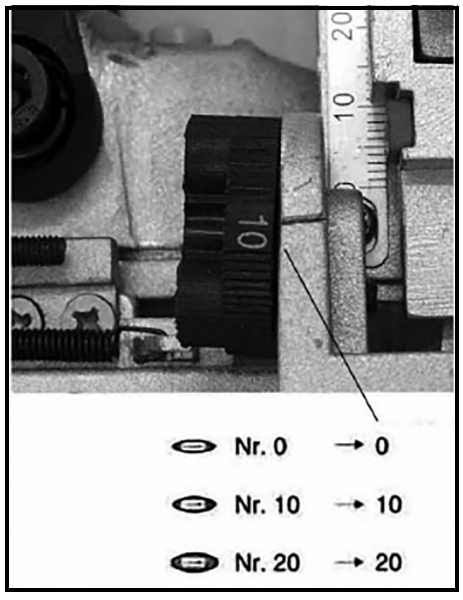

SETTING THE CUTTING HEIGHT AND ANGLE

1. Undo the Locking Wheels for angle and height adjustment.
2. The set height and angle is indicated by the arrow.
3. Set the required height and angle on the scale.

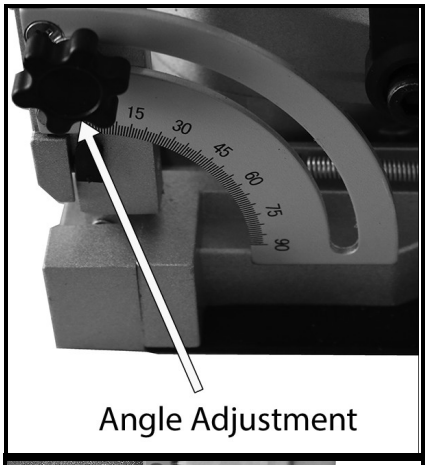

Angle Adjustment

4. Re-tighten the locking wheels.

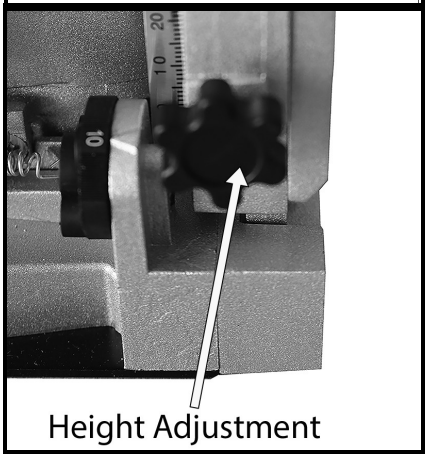

Height Adjustment

APPLICATIONS

The biscuit jointer is suitable for joints in solid wood, plywood, chipboard, fibreboard, plexiglass and artificial marble, from 8mm (5/16 in.) material thickness.

Listed below are the type of joints that can be achieved.

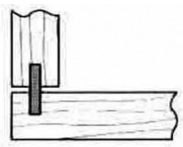	Corner Joint	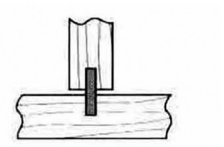	Centre Wall Joint
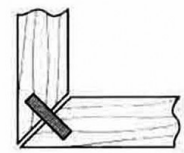	Mitre Joint	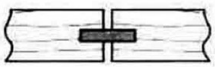	Butt Joint
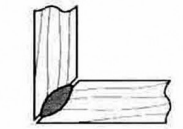	Frame Joint		

SELECTING BISCUIT DOWELS

Always use the largest possible biscuit dowel for a strong joint.

Biscuit Dowel Size	Dimensions	Material Thickness
0	47mm x 15mm x 4mm Biscuit Inset Depth: 8mm	
10	53mm x 19mm x 4mm Biscuit Inset Depth: 10mm	
20	56mm x 23mm x 4mm Biscuit Inset Depth: 12mm	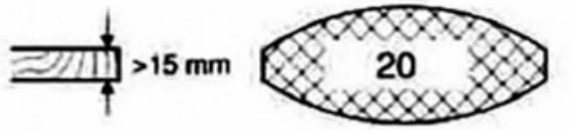

For materials over 25mm (1 in.) thick it is recommended that you use two parallel dowels.

For larger joints, it is recommended that you use two adjacent dowels, centred 10cm apart.

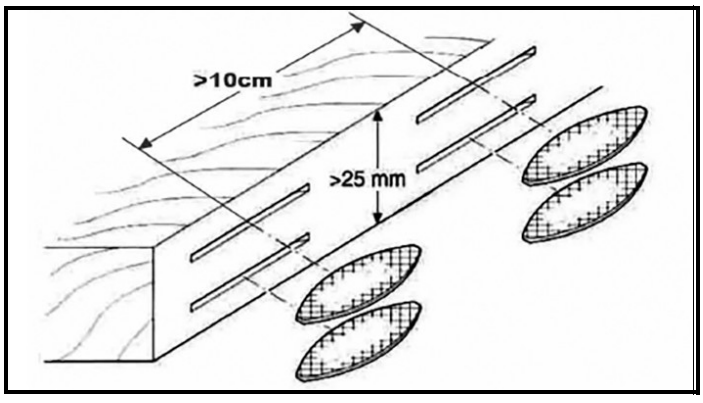

OPERATION

1. Press the ON/OFF switch ‘A’ while moving the switch lock ‘B’ forward to turn ‘ON’ the tool.
2. Loosen the switch lock then press the switch ‘A’ again to turn the tool ‘OFF’.

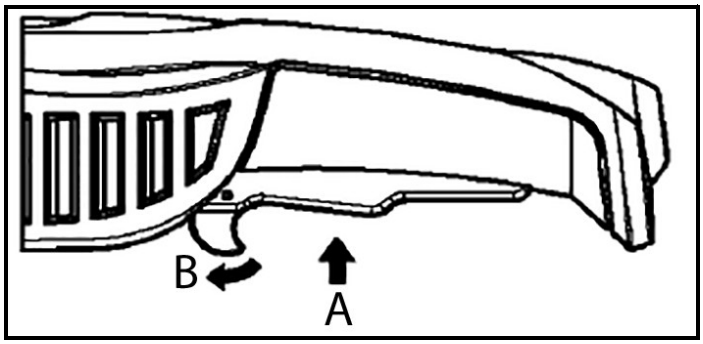

MAINTENANCE

WARNING: FOR YOUR OWN SAFETY, TURN OFF POWER AND DISCONNECT THE TOOL FROM THE POWER SOURCE BEFORE PERFORMING ANY MAINTENANCE.

- The machine is maintenance free except for periodically cleaning away any dust accumulation and the application a light coat of oil to all non-painted surfaces.
- All of the bearings are packed with grease at the factory and require no further lubrication.
- Keep all safety devices, air vents and motor housing free of dirt and dust. Wipe the tool with a clean cloth or blow it with compressed air at low pressure.

NOTE: If using compressed air, always use safety glasses.

- We recommend that you clean the tool immediately each time you have finished using it.
- Clean the tool regularly with a moist cloth and some soft soap. **DO NOT** use cleaning agents or solvents; these could attack the plastic parts of the tool. Ensure that no water seeps into the tool.
- In case of excessive sparking, have the carbon brushes checked by a qualified electrician. **IMPORTANT:** The carbon brushes should not be replaced by anyone but a qualified electrician.

COMPONENT PARTS (1)

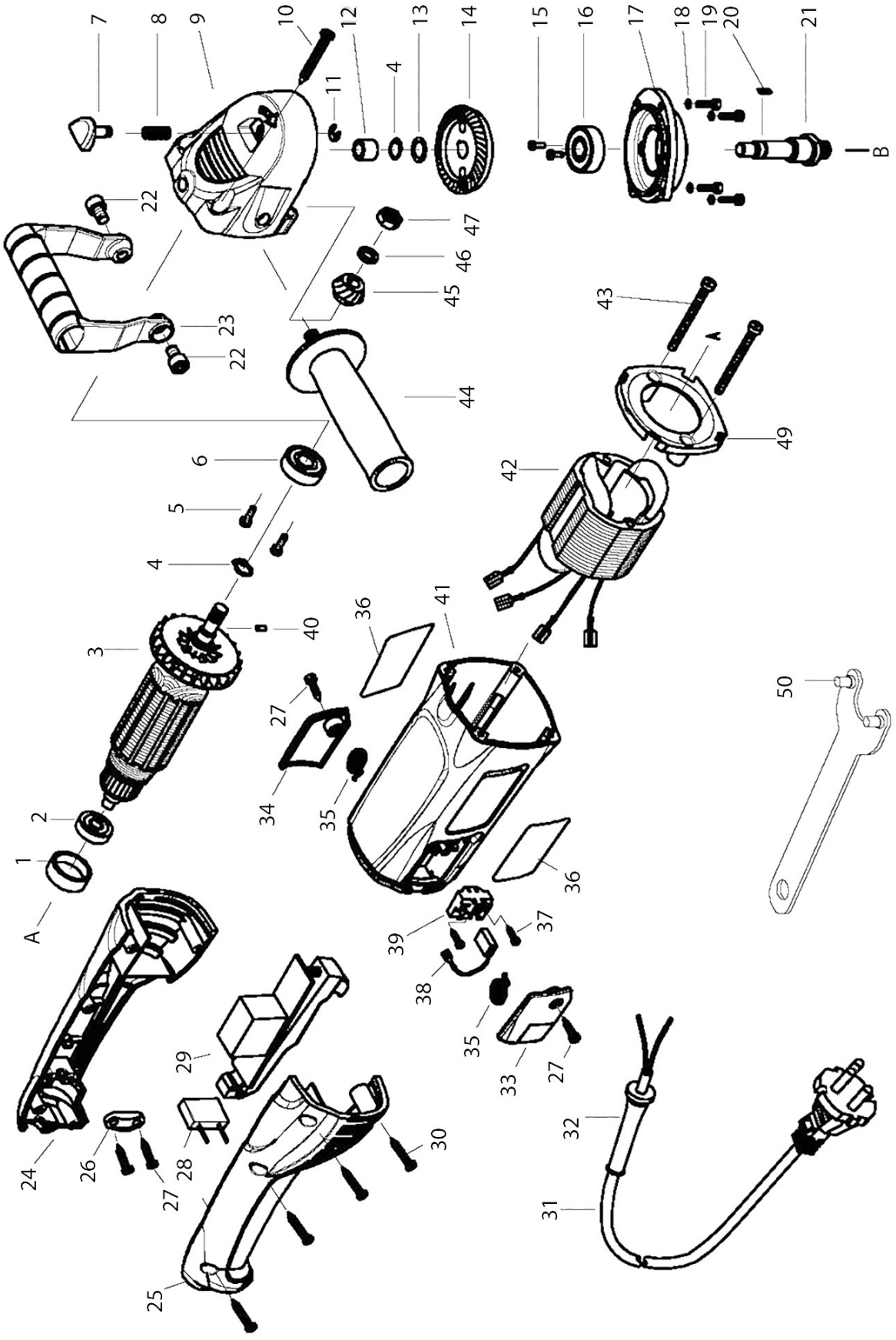

COMPONENT PARTS (2)

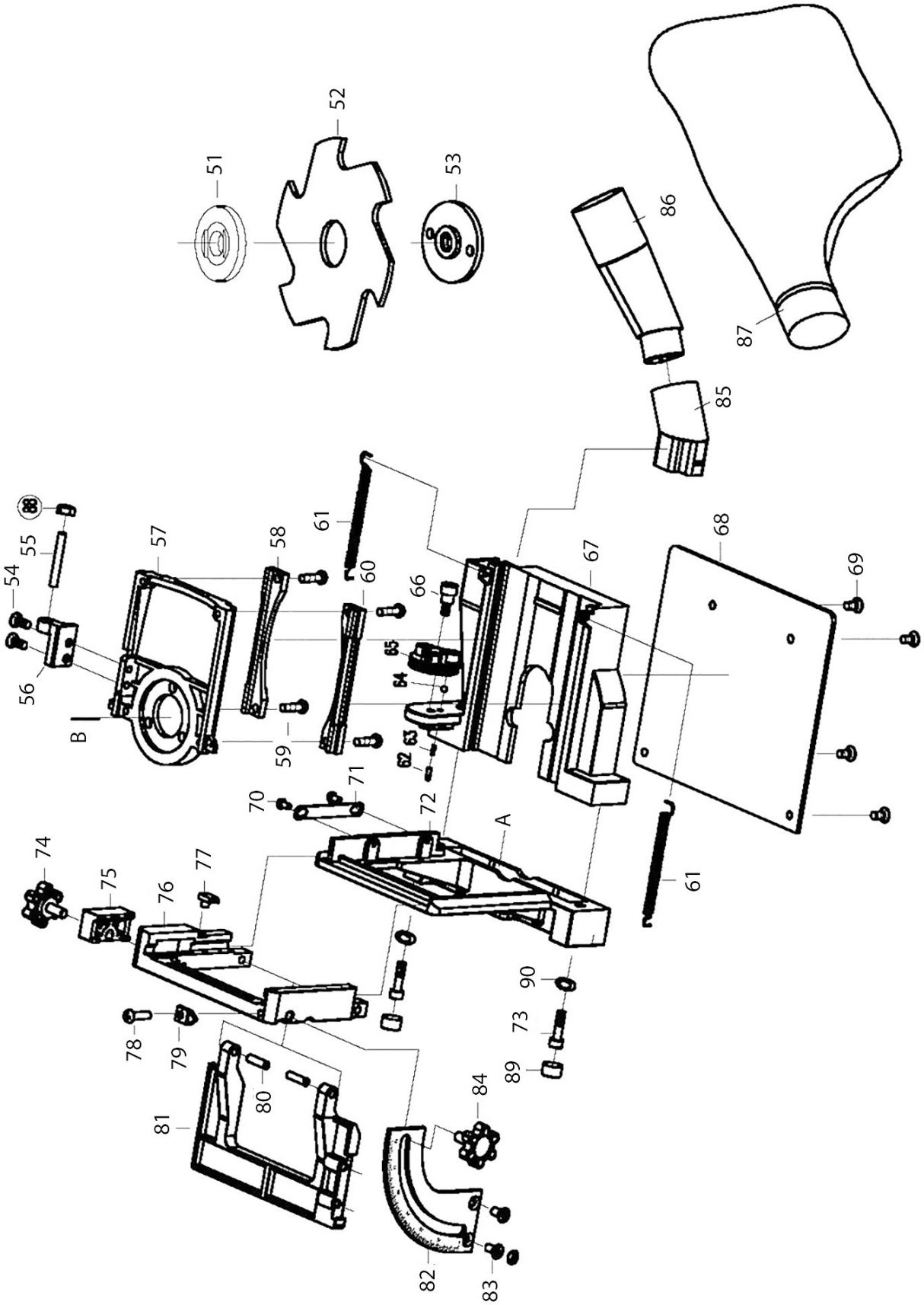

COMPONENT PARTS

No	Description
1	Bearing Set
2	Bearing
3	Armature
4	Ø10 Check Ring x 2
5	M4 x 10 Screw x 2
6	Bearing
7	Stop Pin
8	Spring
9	Gearbox
10	ST4.2 x 22 Screw x 4
11	Ø5 Check Ring
12	Ø12 x Ø8 x 10 Bearing
13	Ø10 Spring Washer
14	Gear
15	M4 x 12 Screw x 2
16	Bearing
17	Front Cap
18	Ø4 Spring Washer x 11
19	M4 x 14 Screw x 2
20	Woodruff Key
21	Spindle
22	M6 x 14 Screw x 2
23	Upper Handle
24	Handle (L)
25	Handle (R)
26	Cable Clamp
27	ST4.2 x 13 Screw x 2
28	Capacitor
29	Switch
30	ST4.2 x 13 Screw x 2

No	Description
31	Power Cable
32	Cable Protector
33	Brush Cap (R)
34	Brush Cap (L)
35	Brush Spring
36	Label x 2
37	ST3.5 x 10 Screw
38	Brush x 2
39	Brush Holder x 2
40	Ø3 x 4.9 Roller
41	Housing
42	Stator
43	M4 x 55 Screw x 2
44	Side Handle (Optional)
45	Pinion
46	Ø8 Spring Washer
47	M8 Nut
48	ST4.2 x 10 Screw x 2
49	Fan Guide
50	Face Spanner
51	Inner Flange
52	Blade
53	Outer Flange
54	M4 x 8 Flat Screw x 2
55	Stud
56	Depth Base Block
57	Depth Slide Plate
58	Guide Bar 1
59	M4 x 14 Screw x 4
60	Guide Bar 2

No	Description
61	Ø0.7 Spring x 2
62	M4 Grub Screw
63	Compression Spring
64	Ø3 Steel Ball
65	Setting Wheel
66	M5 x 12 Shoulder Screw
67	Slide Plate
68	Base Plate
69	M4 x 6 Flat Screw x 4
70	M3 x 6 Screw x 2
71	Depth Mark
72	Support Stand Board
73	M4 x 16 Allen Bolt x 2
74	M5 Locking Knob
75	Pressed Block

No	Description
76	Angle Fence
77	Depth Pointer
78	M4 x 14 Screw
79	Angle Pointer
80	Dowel x 2
81	Pivot Bracket
82	Angle Ruler
83	M4 x 6 Countersunk Screw x 2
84	M5 Angle Locking Knob
85	Dust Port
86	Dust Extractor Adaptor
87	Dust Bag
88	M4 Nut
89	Cap
90	Ø4 Spring Washer

PARTS & SERVICE

This product has been designed to give long and trouble free service. If, however, having followed the instructions in this booklet carefully you encounter problems, refer to your local CLARKE dealer.

DECLARATION OF CONFORMITY - UKCA

UK CA

Clarke® INTERNATIONAL

Hemnall Street, Epping, Essex, CM16 4LG

DECLARATION OF CONFORMITY

This is an important document and should be retained.

We hereby declare that this product(s) complies with the following legislation:

2014/30/EU	*Electromagnetic Compatibility Directive*
2006/42/EC	*Machinery Directive*
2011/65/EU	*Restriction of Hazardous Substances (RoHS) Directive*

The following standards have been applied to the product(s):

EN 61000-3-3:2013+A1+A2, EN 60745-2-19:2009+A1, EN IEC 55014-1:2021, EN IEC 55014-2:2021, IEC 62321-4:2013+AMD1:2017, EN IEC 61000-3-2:2019+A1, IEC 62321-5:2013, IEC 62321-6:2015, EN ISO 17075-1:2017, EN 60745-1:2009+A11, IEC 62321-7-1:2015, IEC 62321-7-2:2017, IEC 62321-3-1:2013, IEC 62321-8:2017

The technical documentation required to demonstrate that the product(s) meet(s) the requirement(s) of the aforementioned legislation has been compiled and is available for inspection by the relevant enforcement authorities.

The UKCA mark was first applied in: 2025

Product Description:	Biscuit Joiner
Model Number(s):	CBJ1010
Serial/Batch Number:	Refer to product/packaging label
Date of Issue:	19/12/2025

Signed:

J.A Clarke

Director

CBJ1010 UKCA Clarke DOC 121925 Page 1 of 1

DECLARATION OF CONFORMITY - CE

CE

Clarke® INTERNATIONAL

Fitzwilliam Hall, Fitzwilliam Place, Dublin 2

DECLARATION OF CONFORMITY

This is an important document and should be retained.

We hereby declare that this product(s) complies with the following legislation:

2014/30/EU	*Electromagnetic Compatibility Directive*
2006/42/EC	*Machinery Directive*
2011/65/EU	*Restriction of Hazardous Substances (RoHS) Directive*

The following standards have been applied to the product(s):

EN 61000-3-3:2013+A1+A2, EN 60745-2-19:2009+A1, EN IEC 55014-1:2021, EN IEC 55014-2:2021, IEC 62321-4:2013+AMD1:2017, EN IEC 61000-3-2:2019+A1, IEC 62321-5:2013, IEC 62321-6:2015, EN ISO 17075-1:2017, EN 60745-1:2009+A11, IEC 62321-7-1:2015, IEC 62321-7-2:2017, IEC 62321-3-1:2013, IEC 62321-8:2017

The technical documentation required to demonstrate that the product(s) meet(s) the requirement(s) of the aforementioned legislation has been compiled and is available for inspection by the relevant enforcement authorities.

The CE mark was first applied in: 2025

Product Description:	Biscuit Joiner
Model Number(s):	CBJ1010
Serial/Batch Number:	Refer to product/packaging label
Date of Issue:	19/12/2025

Signed:

J.A Clarke

Director

CBJ1010 CE Clarke DOC 121925 Page 1 of 1

A SELECTION FROM THE VAST RANGE OF

Clarke®

QUALITY PRODUCTS













AIR COMPRESSORS
From DIY to industrial, Plus air tools, spray guns and accessories.

GENERATORS
Prime duty or emergency standby for business, home and leisure.

POWER WASHERS
Hot and cold, electric and engine driven - we have what you need

WELDERS
Mig, Arc, Tig and Spot.
From DIY to auto/industrial.

METALWORKING
Drills, grinders and saws for DIY and professional use.

WOODWORKING
Saws, sanders, lathes, mortisers and dust extraction.

HYDRAULICS
Cranes, body repair kits, transmission jacks for all types of workshop use.

WATER PUMPS
Submersible, electric and engine driven for DIY, agriculture and industry.

POWER TOOLS
Angle grinders, cordless drill sets, saws and sanders.

STARTERS/CHARGERS
All sizes for car and commercial use.

PARTS & SERVICE:
0208 988 7400

Parts Enquiries
Parts@clarkeinternational.com

Servicing & Technical Enquiries
Service@clarkeinternational.com

SALES: UK 01992 565333 or Export 00 44 (0)1992 565335

Clarke® INTERNATIONAL Hemnall Street, Epping, Essex CM16 4LG
www.clarkeinternational.com